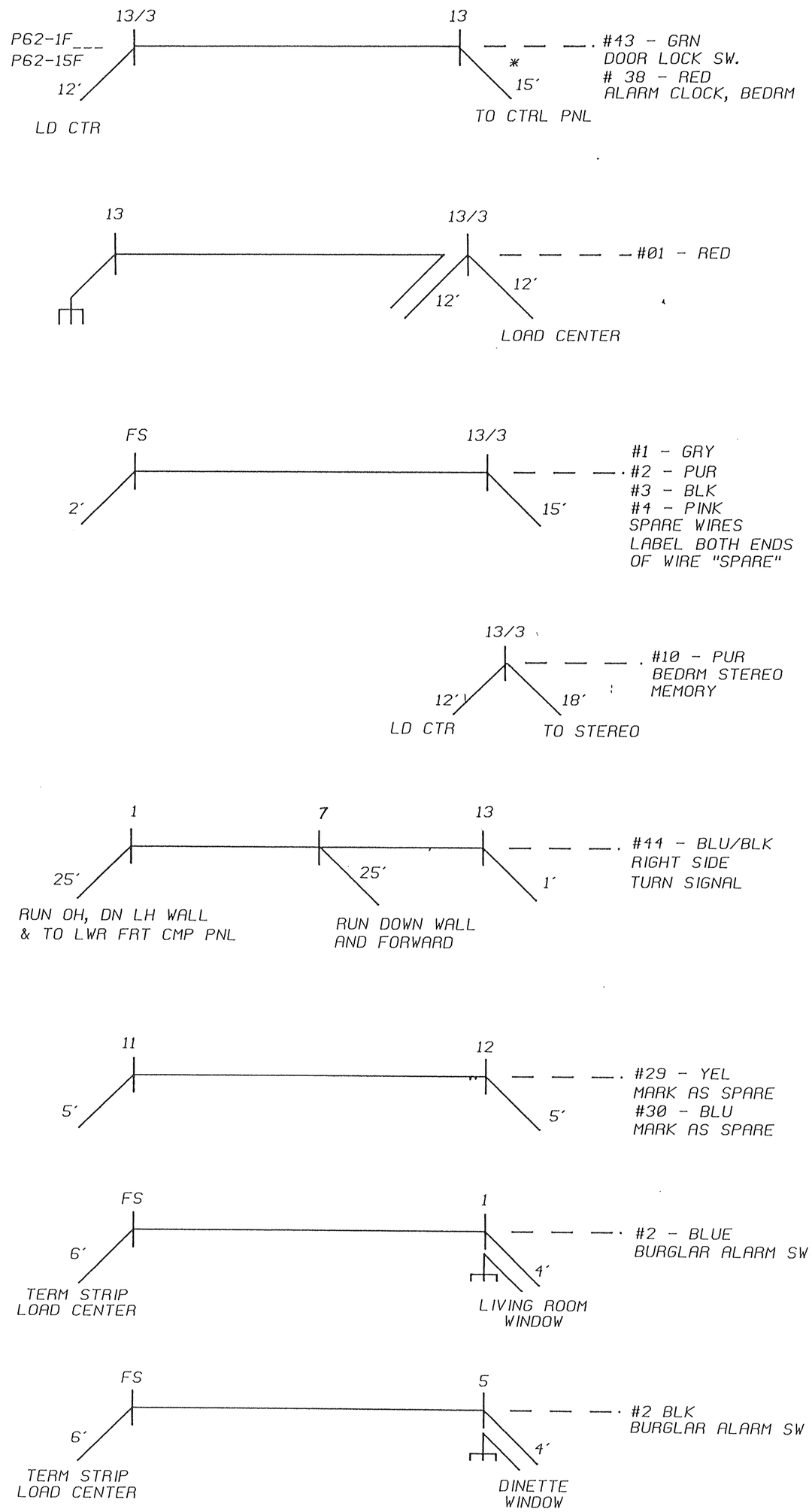

NOTE: ALL WIRES ARE 14GA UNLESS OTHERWISE SPECIFIED

REPLACED BY NOs	INACTIVATES NOs
	6042972

| REVISIONS | | |